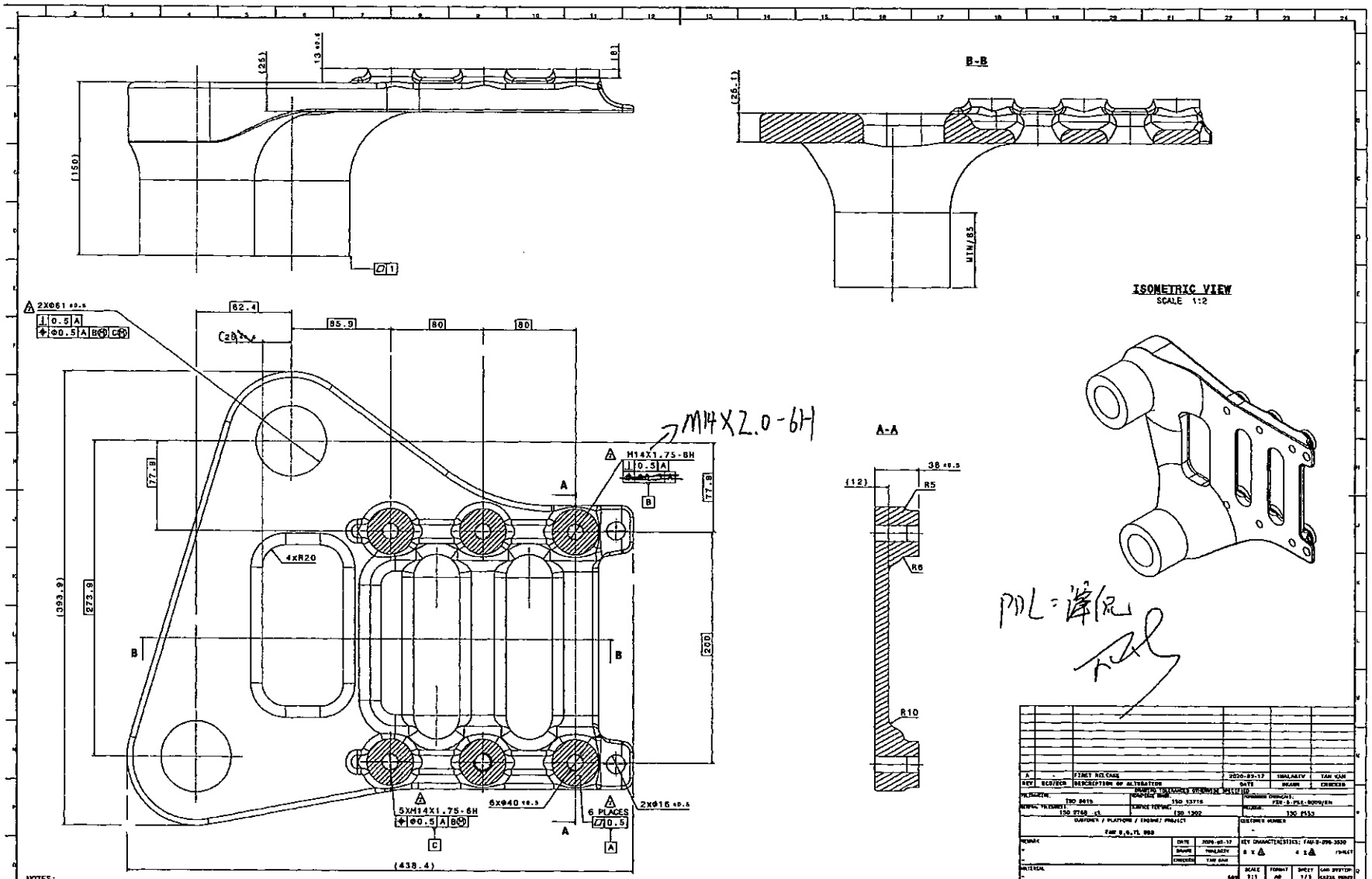
B-B
A-A
ISOMETRIC VIEW
SCALE 1:2
2XØ61 ±0.5
M14X1.75-6H
M14X2.0-6H
4xR20
5XM14X1.75-6H
6XØ40 ±0.5
6 PLACES
2XØ16 ±0.5
(438.4)
(393.9)
273.9
200
77.8
82.4
85.9
80
R5
R6
R10
38 ±0.5
(12)
MTN/85
PDL=導位
BRACKET
faurecia
3230539
A
2020-09-17
TAN KAN
FSE-S-PSE-G002/EN
130 2533
130 2602
130 2615
130 2768 x1
130 13716
130 13202
FAW 8.6.7L 988
SCALE 1:1
FORMAT A0
SHEET 1/1
26.327
FIRST ANGLE
NOTES:
1.UNDIMENSIONED GEOMETRY ACCORDING TO 3D MODEL.
2.PARTS TO BE FREE FROM CRACKS.
3.TOLERANCE UNLESS OTHERWISE STATED : ±0.5
4.STEEL COMPLY WITH FAURECIA STEEL GRADES FSE-S-PSE-G002
Steel Equivalence Table
EU | NAO | ASIA
1.4512 | 409 | SUH409