ZONE	REV	DESCRIPTION	DATE	APPROVAL
-	-	INITIAL RELEASE	-	-

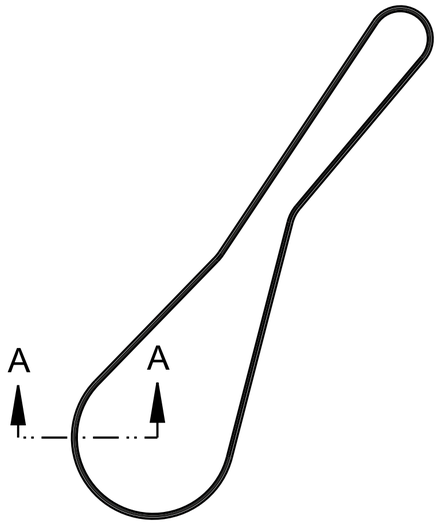

Length Test Identification

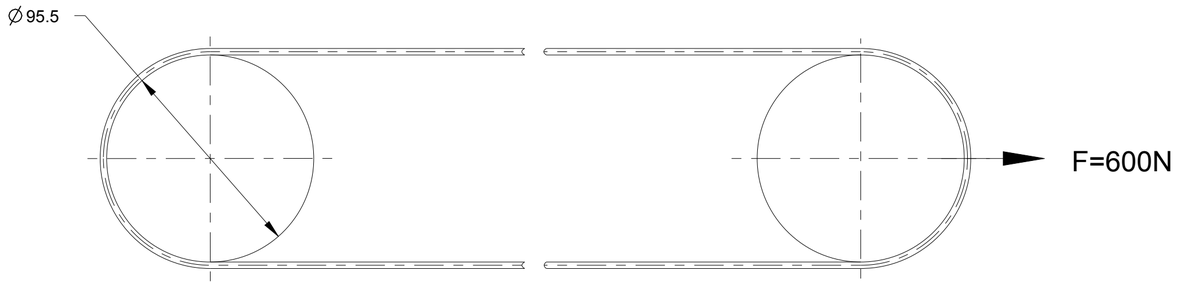

NOTES:

1. OIL.GREASE.WATER OR OTHER CHEMICAL IS NOT PERMITTED ON BELT;
2. MATERIAL: EPDM; AMBIENT TEMPERATURE: -40° C~120°C;
3. MARKING BELT SHOULD BE CLEAR ADHESIVE AND ARRANGED IN ORDER WITH EVEN DISTANCE;
4. OTHER PERFORMANCE SUBJECT TO SAE J2432 {PERFORMANCE TESTING OF PK SECTION V-RIBBED BELTS};

(Z) 5. BELT LENGTH 1204±5 mm.

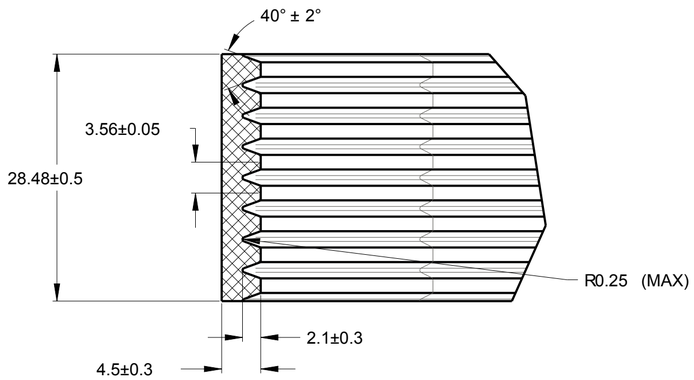

SECTION A-A
SCALE 2:1

PRELIMINARY
NOT FOR MANUFACTURE

FOR QUOTATION ONLY

12- 18 2013

(Z) stands for special characteristic.

QTY. REQD	PART OR IDENTIFYING NO.	NOMENCLATURE OR DESCRIPTION	FIND NO.

PARTS LIST

THIRD ANGLE PROJECTION

DO NOT SCALE DRAWING

METRIC — DIMENSIONS IN MILLIMETERS

PRO/E ORIGINAL DOCUMENT
NO MANUAL CHANGES

ECOMOTORS International
17000 FEDERAL DRIVE, SUITE 200, ALLEN PARK, MI, 48101, USA

INTERPRET DRAWING PER ASME Y14.5M-1994

UNLESS OTHERWISE SPECIFIED TOLERANCES ARE:

LINEAR: ± 0.1
ANGULAR: ± 1°
FILLET RADII: ± 0.25
CORNER RADII: ± 0.25

SURFACE ROUGHNESS: 3.2

PART MUST BE FREE FROM BURRS AND SHARP EDGES.

APPROVALS		DATE (mmddyy)
DESIGNED	TBD	MMDDYY
DETAILED	TBD	MMDDYY
CHECKED	TBD	MMDDYY
APPROVED	TBD	MMDDYY
STATE	Wird bearbeitet	
DEPARTMENT	DESIGN	

TITLE
DESCRIPTION1
DESCRIPTION2

SIZE	DWG NO.	REV
A2	100599AA-PI02-8201C-BELT_DAY	A

SCALE 1:4 | WEIGHT 0.158 kg | SHEET 1 OF 1

MATERIAL
EPDM

VERSION & ITERATION
A.4
DATE & TIME MODIFIED
06-Dec-13 07:20:48 PM

PROPRIETARY AND CONFIDENTIAL
THE INFORMATION CONTAINED IN THIS DRAWING IS THE SOLE PROPERTY OF ECOMOTORS INTERNATIONAL. ANY REPRODUCTION IN PART OR AS A WHOLE WITHOUT THE WRITTEN PERMISSION OF ECOMOTORS INTERNATIONAL IS PROHIBITED.

Location: /Produkte/ECO_OPOC/GenX/PI02

EM A2 SIZE